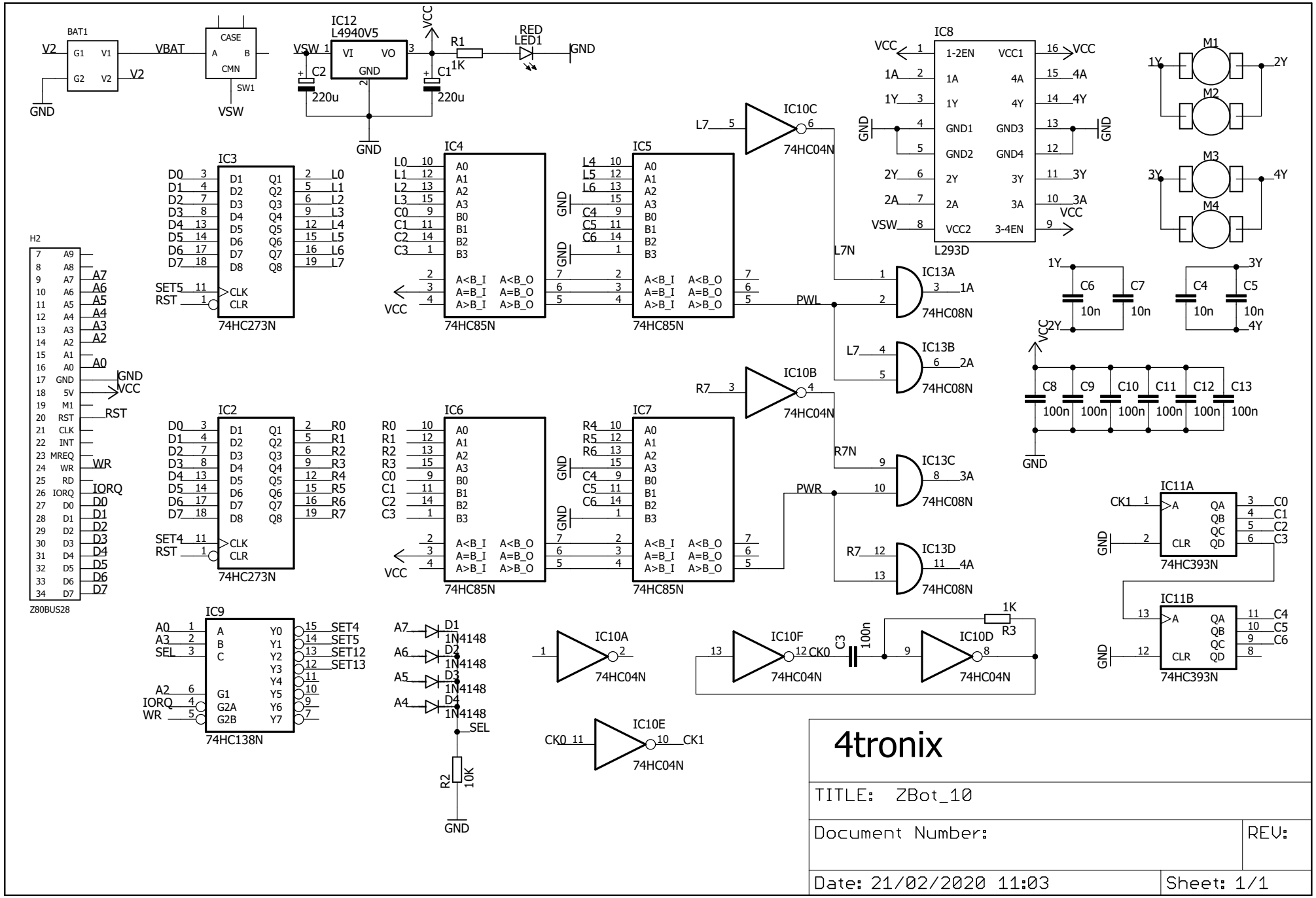

4tronix

TITLE: ZBot_10

Document Number:

REV:

Date: 21/02/2020 11:03

Sheet: 1/1