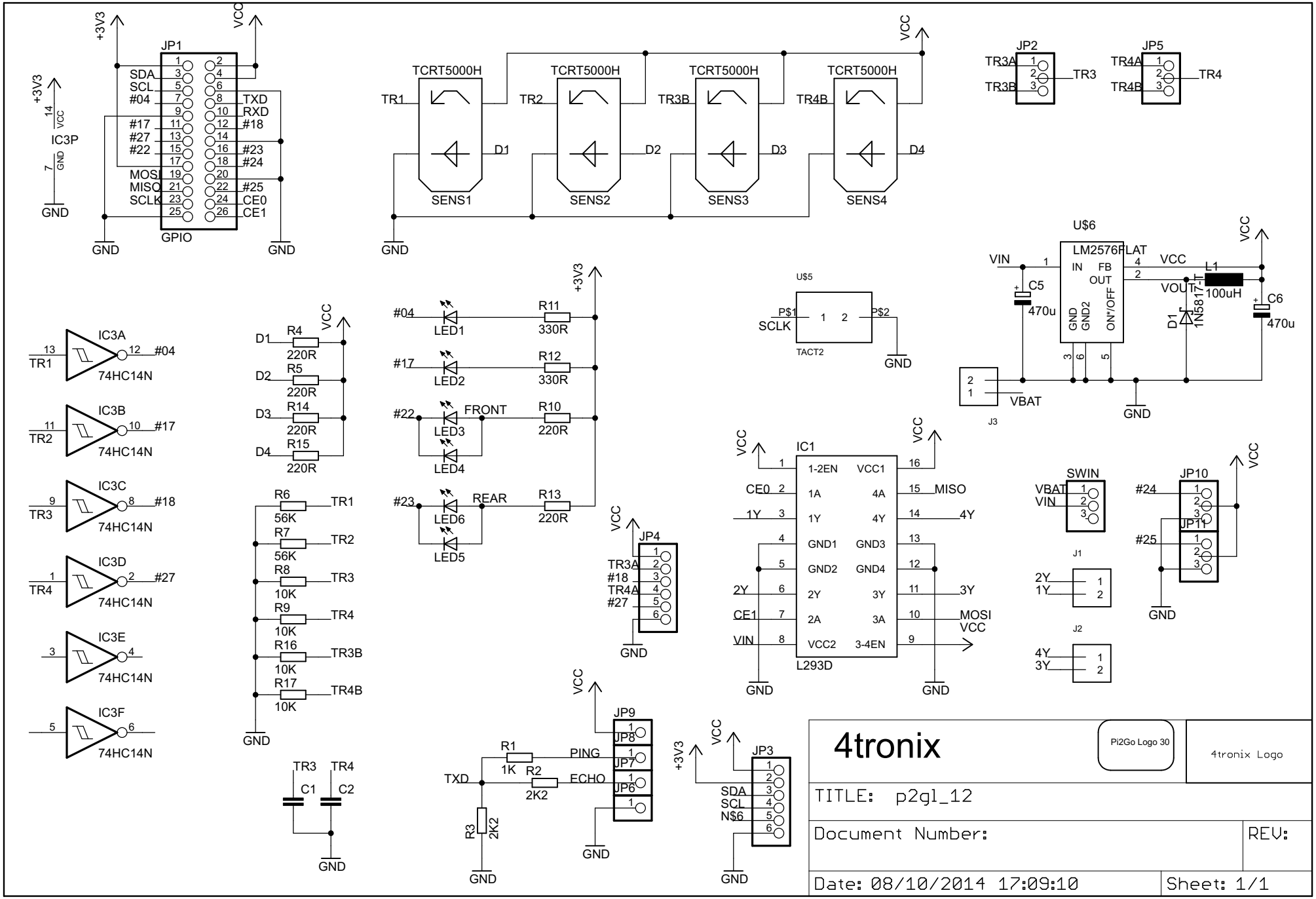
JP1
GPIO
SDA
SCL
#04
#17
#27
#22
MOSI
MISO
SCLK
TXD
RXD
#18
#23
#24
#25
CE0
CE1
+3V3
VCC
GND
IC3P
TCRT5000H
TR1
TR2
TR3B
TR4B
D1
D2
D3
D4
SENS1
SENS2
SENS3
SENS4
JP2
TR3A
TR3B
TR3
JP5
TR4A
TR4B
TR4
U$6
LM2576HLAT
VIN
IN
FB
OUT
GND
GND2
ON*/OFF
C5
470u
L1
100uH
VOUT
D1
1N5817-T
C6
470u
J3
VBAT
U$5
P$1
P$2
SCLK
TACT2
IC3A
IC3B
IC3C
IC3D
IC3E
IC3F
74HC14N
R4
R5
R14
R15
220R
R6
R7
R8
R9
R16
R17
56K
10K
R11
R12
R10
R13
330R
LED1
LED2
LED3
LED4
LED5
LED6
FRONT
REAR
JP4
IC1
L293D
1-2EN
VCC1
CE0
1A
4A
MISO
1Y
4Y
GND1
GND3
GND2
GND4
2Y
3Y
CE1
2A
3A
MOSI
VIN
VCC2
3-4EN
SWIN
J1
J2
JP10
JP11
#24
#25
JP9
JP8
JP7
JP6
R1
1K
R2
2K2
R3
PING
ECHO
JP3
N$6
C1
C2
4tronix
Pi2Go Logo 30
4tronix Logo
TITLE: p2gl_12
Document Number:
REV:
Date: 08/10/2014 17:09:10
Sheet: 1/1